INSTALLATION GUIDE

XT SERIES

DIGITAL MONITORING PRODUCTS, INC.

MODEL XT30/XT50 SERIES
CONTROL PANEL INSTALLATION GUIDE

© 2024 Digital Monitoring Products, Inc.

Information furnished by DMP is believed to be accurate and reliable.
This information is subject to change without notice

CONTENTS

Get Started 1

How to Read This Guide 1

Caution Notes 1

Compliance Instructions 1

What's Included 1

What You'll Need 1

System Components 2

Wiring Diagram 2

Lightning Protection 2

Accessory Devices 2

XT30/XT50 Wiring Diagram 4

Step 1: Mount the Enclosure 5

Step 2: Mount the Keypads 6

Mounting Keypads 6

Understanding Keypad Specifications 6

Step 3: Wire the Power Supply 7

Wire the Primary Power Supply 7

AC Terminals 1 and 2 7

Transformer Type 7

Power LED 7

Wire the Secondary Power Supply 7

Battery Terminals 3 and 4 7

Earth Ground 7

Replacement Period 7

Discharge/Recharge 8

Battery Supervision 8

XT30/XT50 Power Requirements 8

XT30/XT50 Standby Battery Calculations 8

Step 5: Wire the Terminals 9

Wire for Bell Output - Terminals 5 and 6 9

Wire the Keypad Data Bus - Terminals 7, 8, 9, and 10 9

Terminal 7 - RED 9

Terminal 8 - YEL 9

Terminal 9 - GRN 9

Terminal 10 - BLK 9

Keypad Bus LEDs 9

Programming (PROG) Connection 9

Keypad Addressing 9

Overcurrent OVC LED 9

Wire Smoke and Glassbreak Detector Output - Terminal 11 10

Wire Burglary Zones - Terminals 12 - 24 10

Operational Parameters 10

Zone Voltages Using 2.2k Ω Resistors 10

Zone Response Time 10

Keyswitch Arming Zone 10

Wire Powered Zone for 2-Wire Smoke Detectors - Terminals 25 and 26 11

Step 6: Wire Hardware Components 11

Wire for Annunciator Outputs 11

Harness Wiring 11

Model 860 Relay Module 11

Connect to Public Telephone Network 12

FCC Registration 12

Notification 12

Connect to Ethernet 12

Ethernet LEDs 12

Reset the Panel 13

Update Panel Software on Flash LOAD Jumper 13

Model 399 Cable (Remote Link Only) 13

Model 401 USB Flash Module 14

Connect to Cell 14

Connect to Wi-Fi 14

Wire for On-Board 1100 Series Wireless Antenna Connection 15

Wireless Antenna 15

LED Operation 15

Step 7: Install Wireless Keypads 16

Mount the Keypads 16

Associate Wireless Keypads 16

LCD Wireless Keypad 16

Wireless Graphics Touchscreen Keypad 16

Power/Armed LED 16

Listed Compliance Specifications 17

Bypass Reports 17

Current Draw 17

Battery Standby 17

Auxiliary and Bell Current 17

Cross Zoning 17

App Key 17

Compliance 18

Household Burglar-Alarm System Units - ANSI/UL 1023 18

Digital Burglar Alarm Communicator System Units - ANSI/UL 1635 18

Central Station Burglar Alarm Units - ANSI/UL 1610 19

Household Fire Warning System - ANSI/UL 985 NFPA 72 Specifications 19

California State Fire Marshal Specifications 20

False Alarm Reduction Programmable Options - ANSI/SIA CP-01-2010 21

Shipping Defaults and Recommended Programming 21

Call Waiting 21

Entry Delay 21

Local Bell 22

Minimum Installation Requirements 22

Troubleshooting 23

Troubleshooting Section 23

Common LCD Keypad Displays 23

Wiring Diagrams 24

Multiple Indicating Circuit Modules Installation 24

System Sensor 2-Wire Smoke Detectors 25

Specifications 26

Power Supply 26

Enclosure 26

Communication 26

Keypads/Expansion 26

Panel Zones 26

Number of Zones 27

Outputs 27

Certifications 27

ETL Listed 27

FCC Information 28

Industry Canada Information 28

GET STARTED

The panel can be programmed to operate as any of the following system types:

- All/Perimeter system that provides one perimeter area and one interior area
- Home/Sleep/Away system that provides one perimeter, one interior, and one bedroom area. The bedroom area provides for any protection devices the user wants disarmed during their sleeping hours and armed as Away.
- Six area system that provides areas of protection that can be independently armed or disarmed.

How to Read This Guide

Caution Notes

Throughout this guide you will see caution notes containing information you need to know when installing the panel. These cautions are indicated with a ⚡ yellow lightning bolt. Whenever you see a caution note, make sure you completely read and understand its information. Failing to follow the caution note can cause damage to the equipment or improper operation of one or more components in the system.

Compliance Instructions

For applications that must conform to a local authorities installation standard or a National Recognized Testing Laboratory certificated system, please see *"Listed Compliance Specifications"* near the end of this guide for additional instructions.

What's Included

Your kit or package may include more devices and accessories than what is shown below.

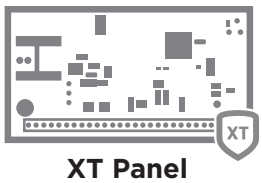

XT Panel

Hardware Pack

What You'll Need

- Drill
- Pliers
- Wire connectors

SYSTEM COMPONENTS

Wiring Diagram

The system wiring diagram in *"Figure 1: System Wiring Diagram"* shows some of the accessory devices for use in various applications. A description of each module follows.

Lightning Protection

Metal Oxide Varistors and Transient Voltage Suppressors help protect against voltage surges on input and output circuits. This transient protection provides additional resistance to electrical surges such as lighting. Additional surge protection is available by installing the DMP 370 or 370RJ Lightning Suppressors.

Accessory Devices

CELLULAR COMMUNICATOR CARDS	
263LTE Cellular Communicator	Allows you to connect the XT30/XT50 Series to the Verizon or AT&T LTE network. Panel firmware Version 212 or higher required.
263EXT Cellular Extension Module	Allows you to remote the cell module away from the panel.
263LTE-2 Cellular Communicator	Allows you to connect to both Verizon and AT&T LTE network. Panel firmware Version 242 or higher required.

ZONE AND OUTPUT EXPANSION MODULES	
710 Bus Splitter/Repeater	Increases keypad wiring distance to 2500 feet.
711, 711S Single Point Zone Expander	Provides one Class B zone for burglary devices and non-powered fire devices.
712-8 Zone Expander	Provides 8 zones for burglary devices.
714, 714-8, 714-16 Zone Expander	Provides Class B zones for burglary and non-powered fire devices.
715, 715-8, 715-16 Zone Expander	Provides 12 VDC Class B powered zones for smoke detectors, glassbreak detectors, and other 2- or 4-wire devices.
860, 860-4 Relay Output Module	Provides one relay and three relay sockets for expansion of up to four relays.

INTERFACE MODULE	
734 Wiegand Interface Module	Provides arming, disarming, and codeless entry using access control readers.
738Z+ Z-Wave Interface Module	Provides connection for Z-Wave modules.

WI-FI MODULE	
763 Module	Allows you to add Wi-Fi alarm signal communication to XT30/XT50 panels, version 124 or higher with Level L hardware.

KEYPADS	
7000 Series Thinline™ and Aqualite™ Keypad	Allows you to control the panel from various remote locations. Connect up to eight keypads. Model 7060, 7063, 7070, 7073, 7160, 7173 Thinline™ Keypads, 7060A and 7073A Aqualite™ Keypads, 7360, 7363 Thinline Icon Series Keypads to the keypad bus using terminals 7, 8, 9, and 10.
7800 Series 5-Inch Touchscreen Keypads	Allows you to control the panel from various remote locations. Connect up to eight keypads. 7872 and 7873 Graphic Touchscreen Keypads.
8860 Series 7-Inch Touchscreen Keypads	Allows you to control the panel from various remote locations. Refer to the Network section of the XT30/XT50 Programming Guide (LT-0981) for available number of keypads based on panel settings. 8860 Graphic Touchscreen Keypad using a hardwired or Wi-Fi connection.
9000 Series Wireless LCD Keypads	Allows you to control the panel from various remote locations. Connect up to seven keypads. 9060, 9063 Wireless Keypads.
9800 Series Wireless Graphic Touchscreen Keypads	Allows you to control the panel from various remote locations. Connect up to seven keypads. 9862 Wireless Keypads.

DMP TWO-WAY WIRELESS DEVICES	
1100DH/1100DHE/1100DI Receiver	Supports transmitters in residential or commercial wireless operation on the keypad bus.
1100R/1100RE Repeater	Provides additional range for wireless devices.
1100T/1100TF Translator	Allows upgrades of non-DMP systems with one way, low frequency, wireless transmitters to DMP.
1101 Universal Transmitter	Provides both internal and external contacts that may be used at the same time to yield two individual reporting zones from one wireless transmitter. Provides Disarm/Disable functionality.
1102/1102E Universal Transmitter	Provides one external contact. Provides Disarm/Disable functionality.
1103 Universal Transmitter	Provides both internal and external contacts that may be used at the same time to yield two individual reporting zones from one wireless transmitter. Requires EOL resistor for external contact. Provides Disarm/Disable functionality.
1106 Universal Transmitter	Provides both internal and external contacts that may be used at the same time to yield two individual reporting zones from one wireless transmitter. Provides Disarm/Disable functionality.
1107 Micro Window Transmitter*	Provides a window transmitter and magnet.
1108 Doorbell Module*	The 1108 Doorbell Module monitors doorbell button presses.
1114 Four-Zone Expander*	Provides four wireless zones with EOL resistors.
1115 Temperature Sensor and Flood Detector*	Temperature and flood detector with an internal temperature sensor. Can be paired with 470PB or T280R remote sensors.
1116 Relay Output*	Provides one Form C relay.
1117 LED Annunciator*	Provides a visual system status indicator.
1119 Door Sounder*	Provides a battery operated sounder.
1122 PIR Motion Detector*	Provides motion detection with pet immunity.
1126R PIR Motion Detector*	Ceiling mount motion detector with panel programmable sensitivity and Disarm/Disable functionality.
1127C/1127W PIR Motion Detector	Wall mount motion detector with panel programmable sensitivity and Disarm/Disable functionality.
1128 Glassbreak Detector*	Detects the shattering of framed glass mounted in an outside wall and provides full-pattern coverage and false-alarm immunity.
1131 Recessed Contact*	Provides concealed protection for doors, windows or other applications.
1134 Access Control Module	Allows you to use the access control capability of DMP Panels using smartcard, proximity, mag stripe, or biometric readers, or other compatible authentication devices.
1135/1135E Siren*	Provides a wireless siren.
1136 Remote Chime	The 1136 Wireless Remote Chime is a multi-function sounder that plugs directly into a standard 110 VAC wall outlet.
1137 LED Emergency Light	Provides path lighting in the event of an alarm or trouble such as Burglary Alarm Output or can be activated simultaneously by the panel via the Trip with Panel Bell feature.
1139 Bill Trap*	Provides a silent alarm option for retail and banking cash drawers.
1141 Wall Button*	One button wall mounted wireless transmitter.
1142BC Two-button Panic Belt Clip Transmitter	Provides portable two-button panic operation.
1142 Two-button Panic Transmitter	Provides permanently mounted under-the-counter two-button panic operation
1144-4 (Four-Button)* 1144-2 (Two-Button) 1144-D (Dual-Button)* 1144-1 (One-Button)*	Key Fob transmitters designed to clip onto a key ring or lanyard.
1148 Personal Pendant*	One button one-button, wireless emergency transmitter designed to be worn as a wristband or on a break-away lanyard.
1154 4-Zone Input Module*	Converts up to four existing normally closed, hardwired zones into wireless zones.
1158 Eight-Zone Input Module*	Converts up to eight existing normally closed, hardwired zones into wireless zones.
1164/1164NS Commercial Smoke	Battery powered, wireless, low profile, photoelectric smoke detector. The 1164 also offers a synchronized sounder.
1166 Smoke Ring	Installed with any traditional AC-powered interconnected smoke detector system and provides an audible alert in the event of a fire.
1168 CO/Smoke Detector	Wireless CO/Smoke/Low Temp detector.
1183-135F Heat Detector	Fixed temperature heat detector.
1183-135R Heat Detector	Fixed temperature and rate-of-rise heat detector.
1184 Carbon Monoxide Detector	Carbon Monoxide Detector.

* These devices have not been investigated and shall not be used in listed installations.

XT30/XT50 Wiring Diagram

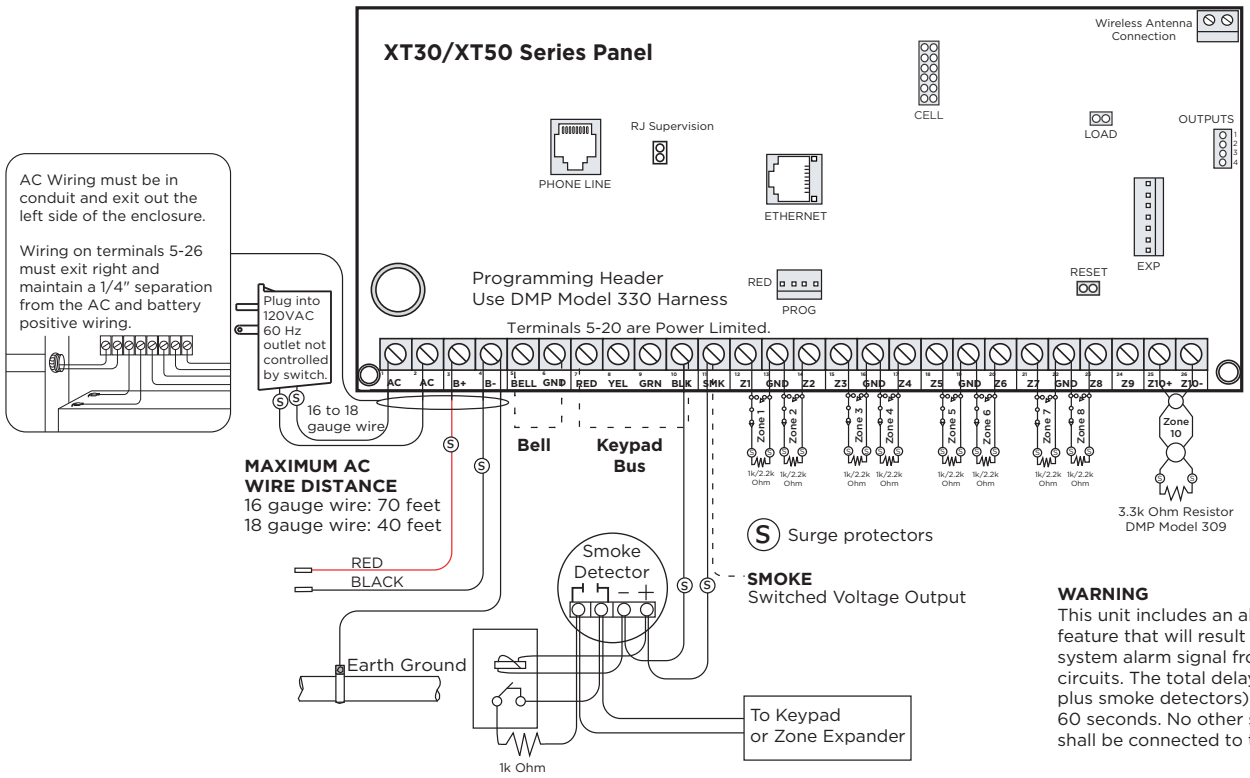

WARNING
This unit includes an alarm verification feature that will result in a delay of the system alarm signal from the indicated circuits. The total delay (control unit plus smoke detectors) shall not exceed 60 seconds. No other smoke detector shall be connected to these circuits.

Figure 1: System Wiring Diagram

USE MARKING
Commercial Central Station; Household Fire and Burglar Warning System Control Unit (DACT, PSDN: IP or Cellular)

TYPES OF SERVICE
Suitable for DACT Central Station.

Suitable for Household Fire and Household Burglary. Test weekly.

SIA CP-01-2010 minimum system is XT30 or XT50, local Bell, and off premise DACT communication to an SCS-1R receiver plus ANSI/SIA CP-01-2010 classified compatible DMP keypads as indicated in the installation guide.

LISTED APPLICATIONS
For listed applications the maximum current from a combination of bell output and auxillary output is 1.6 amps.

NFPA 72
This equipment should be installed in accordance with Chapter 11 of the National Fire Alarm Code, ANSI/NFPA 72-2002, (National Fire Protection Association, Batterymarch Park, Quincy, MA 02269). Printed information describing proper installation, operation, testing, maintenance, evacuation planning, and repair service is to be provided with this equipment. Warning: Owner's instruction notice, not to be removed by anyone except occupant.

HOUSEHOLD FIRE WIRING
Recognized limited energy cable must be used for connection of all initiating, indicating, and supplementary devices.

POWER LIMITED
All circuits on the Model XT30/XT50 comply with the requirements for inherent power limitation and are Class 2.

DMP TRANSFORMERS
Model 321:
16.5 VAC 40 VA Class 2 plug-in.

BELL
10.2 - 13.9VDC
Total current:
1.5 Amps max. w/ 40 VA

AUX (RED)
Up to 500 mA auxiliary current at 10.2 VDC - 13.9 VDC from Terminal 7
Up to 325 mA auxiliary current at 10.2 VDC - 13.9 VDC from Terminal 7 when using (2) Model 364 1.3 Ah Batteries

SMOKE OUTPUT
100 mA at 10.2 - 13.9 VDC Terminal 11

ZONE 10 COMPATIBILITY IDENTIFIER
A

MAXIMUM OPERATING RANGE
8.8 VDC - 14.2 VDC

AUXILIARY OUTPUT
Minimum voltage on Auxiliary output to process Sensor trips is 10.4VDC.

EXP HEADER
The 763 Wi-Fi Module connects to XT30/XT50 panel using the included cable and operates at 12 VDC from the panel power supply.

LISTED RESISTORS
1.0k Ohm - DMP Model 311
3.3k Ohm - DMP Model 309

ZONES 1-9
1k or 2.2k Ohm EOL on each zone

ZONE 10
Heat detectors, manual pull stations, or any other shorting device. Unlimited number of units.

Verification Zone 10	Control Unit Delay 13.6 sec.	Smoke Model _____	Detector Delay ____sec.
For Wireless Devices, Control Unit delay is 0 (zero)			

SECONDARY POWER SUPPLY
1.2 Amps maximum charging current.
Use only 12 VDC rechargeable batteries.
Replace every 3 to 5 years.

STEP 1: MOUNT THE ENCLOSURE

The metal enclosure must be mounted in a secure, dry place to protect the panel from damage due to tampering or the elements. It is not necessary to remove the PCB when installing the enclosure. The PCB may be installed in the standard 340 Small enclosure, optional 341 Kiosk enclosure, optional 349 Medium enclosure, or the optional 349A Attack enclosure.

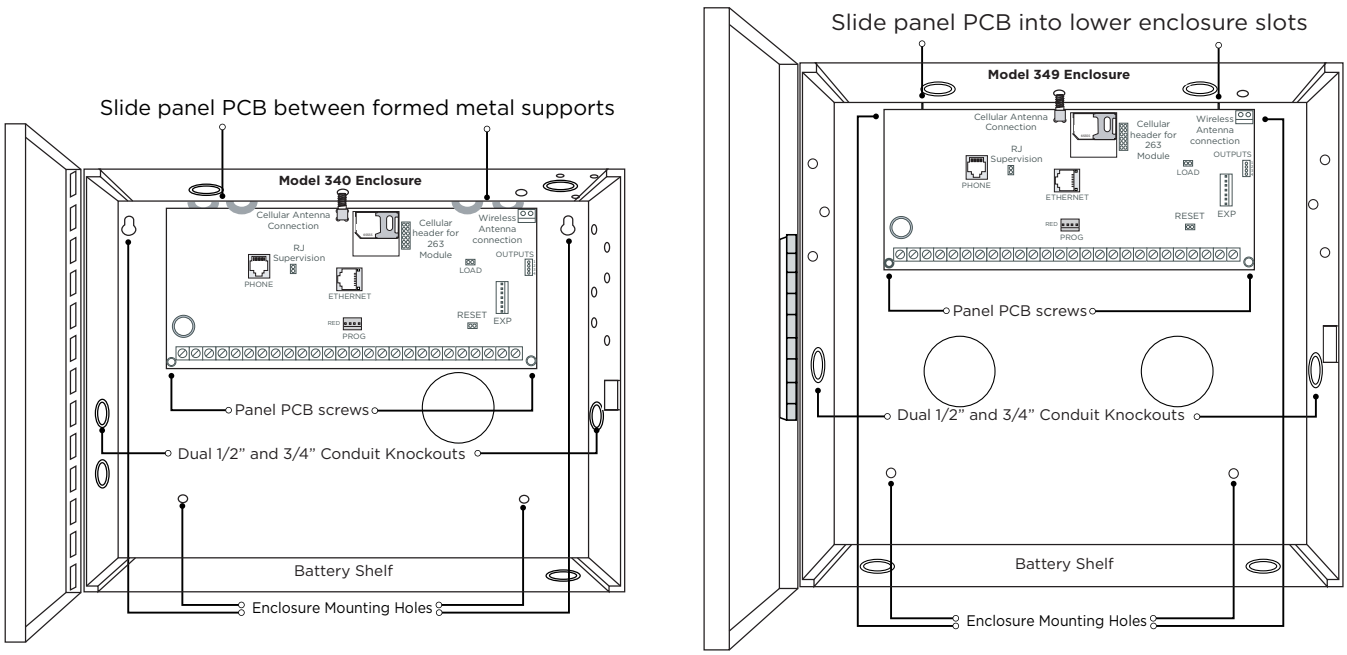

Figure 2: Standard 340 Enclosure (left), Optional 349 Enclosure (right)

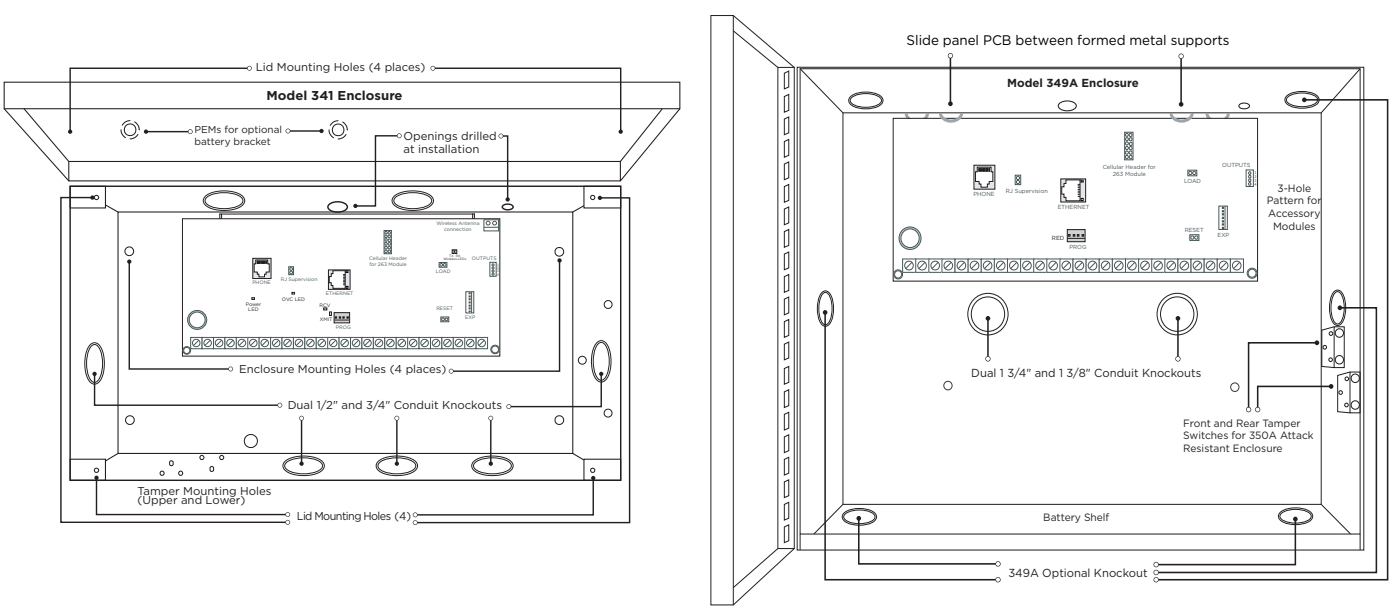

Figure 3: Optional 341 Enclosure (left), Optional 349A Enclosure (right)

STEP 2: MOUNT THE KEYPADS

Mounting Keypads

DMP keypads have removable covers that allow the base to be mounted on a wall or other flat surface using the screw holes provided on each corner.

For mounting keypads on solid walls, or for applications where conduit is required, use a DMP 695 or 696 keypad conduit backbox.

Understanding Keypad Specifications

Several factors determine the performance characteristics of the keypad bus: the length of wire used, the number of devices connected, and the voltage at each device. When planning a keypad bus installation, keep in mind the following four specifications:

- DMP recommends using 18- or 22-gauge unshielded wire for all keypad circuits. Do not use twisted pair or shielded wire for keypad bus data circuits.
- On keypad bus circuits, to maintain auxiliary power integrity when using 22-gauge wire do not exceed 500 feet. When using 18-gauge wire do not exceed 1,000 feet. To increase the wire length or to add devices, install an additional power supply.
- Maximum distance for any one bus circuit (length of wire) is 2,500 feet regardless of the wire gauge. This distance can be in the form of one long wire run or multiple branches with all wiring totaling no more than 2,500 feet. As wire distance from the panel increases, DC voltage on the wire decreases.
- Maximum voltage drop between the panel (or auxiliary power supply) and any device is 2.0 VDC. If the voltage at any device is less than the required level, add an auxiliary power supply at the end of the circuit. When voltage is too low, the devices cannot operate properly.

For additional information refer to the 710 Installation Sheet (LT-0310) and or the LX-Bus/Keypad Bus Wiring Application Note (LT-2031).

STEP 3: WIRE THE POWER SUPPLY

Wire the Primary Power Supply

AC Terminals 1 and 2

Connect the transformer wires to terminals 1 and 2 on the panel. Use no more than 70 ft. of 16 gauge, or 40 ft. of 18 gauge, wire between the transformer and the panel to deliver a minimum of 15.5 VAC when 500 mA of current draw is used from the auxiliary power supply terminal 7.

Caution: Always ground the panel before applying power to any devices. The panel must be properly grounded before connecting any devices or applying power to the panel. Proper grounding protects against Electrostatic Discharge (ESD) that can damage system components. See *"Earth Ground"*, in the Secondary Power Supply section.

Transformer Type

The transformer for the panel is 16.5 VAC 40 VA. This provides up to 1.5 Amps of bell output current, 500 mA of auxiliary current, and 100 mA of smoke detector output. Use the 321 plug-in transformer with the panel. The total current available is limited by the total battery standby requirements of the installation.

Caution: The transformer must be connected to a 120 VAC 60 Hz commercial power outlet that is not controlled by a wall switch. Never share the transformer output with any other equipment.

Power LED

When either AC transformer power or DC battery power is connected to the panel the PWR LED shows steady green.

Wire the Secondary Power Supply

Battery Terminals 3 and 4

Connect the black battery lead to the negative battery terminal. The negative terminal connects to the enclosure ground internally through the XT30 or XT50 circuit board. Connect the red battery lead to the positive battery terminal. Observe polarity when connecting the battery.

Add a second battery in parallel using the DMP Model 318 Dual Battery Harness. DMP requires each battery be separated by a PTC in the battery harness wiring to protect each battery from a reversal or short within the circuit. See Figure 4.

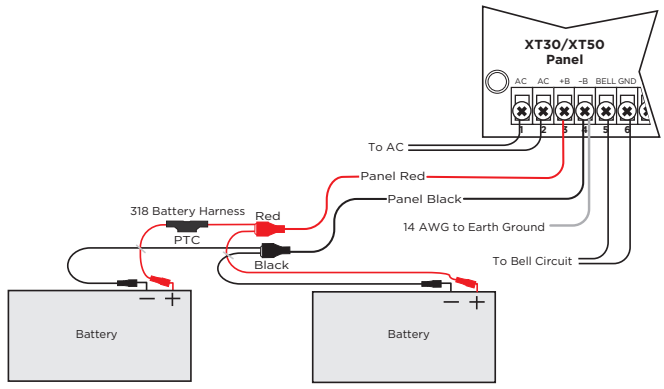

Figure 4: Wiring Multiple Batteries

Caution: Use sealed lead-acid batteries only: Use 12 VDC sealed lead-acid rechargeable battery. Batteries supplied by DMP have been tested to ensure proper charging with DMP products. Gel Cell batteries cannot be used with the XT30/XT50 panel.

Earth Ground

Terminal 4 of the panel must be connected to earth ground using 14 gauge or larger wire to provide proper transient suppression. DMP recommends connecting to a metal cold water pipe or ground rod only. Do not connect to electrical conduit or a telephone company ground.

Replacement Period

DMP recommends replacing the battery every 3 to 5 years under normal use.

Discharge/Recharge

The panel battery charging circuit float charges at 13.9 VDC at a maximum current of 1.2 Amps using a 40 VA transformer. The total current available is reduced by the combined auxiliary current draw from terminals 7, 11, and 25. The various battery voltage levels are listed below:

- Battery Trouble: Below 11.9 VDC
- Battery Restored: Above 12.6 VDC

Battery Supervision

The panel tests the battery once every hour when AC power is present. This test occurs 15 minutes past each hour and lasts for five seconds. A load is placed on the battery and if its voltage falls below 11.9 VDC a low battery is detected. If AC power has failed, a low battery is detected any time the battery voltage falls below 11.9 VDC.

If a low battery is detected with AC power present, the test is repeated every two minutes until the battery charges above 12 VDC; the battery restored voltage. If a faulty battery is replaced with a fully charged battery, the restored battery will not be detected until the next two-minute test is done.

XT30/XT50 Power Requirements

During AC power failure, the panel and all auxiliary devices connected draw their power from the battery. All devices must be taken into consideration when calculating the battery standby capacity. On the following page is a list of the power requirements of the panel. Add the additional current draw of DMP keypads, smoke detector output, and any other auxiliary devices used in the system for the total current required. The total is then multiplied by the total number of standby hours required to arrive at the total Amperehours required.

XT30/XT50 Standby Battery Calculations

For complete battery calculations, see the Battery Calculator.

STEP 5: WIRE THE TERMINALS

Wire for Bell Output - Terminals 5 and 6

Nominal 12 VDC is supplied by terminal 5 on the panel to power alarm bells or horns. The output is rated for a maximum of 1.5 Amps with a 40 VA transformer. This output can be steady, pulsed, or Temporal Code 3 depending upon the Bell Action specified in Bell Options programming. Terminal 6 is the ground reference for the bell circuit. If using a horn or siren, a 1k Ohm resister should be added across the bell circuit for supervision.

Wire the Keypad Data Bus - Terminals 7, 8, 9, and 10

Terminals 7, 8, 9, and 10 of the panel are designated as the keypad data bus. In addition to keypads, the XT30/XT50 allows the connection of any combination of zone expansion modules, Glassbreak Detectors, and PIRs to the keypad bus up to the maximum of eight devices.

Terminal 7 - RED

Nominal 12 VDC is supplied at terminal 7 to power keypads and zone expanders. This is also where power for any auxiliary device is supplied. The ground reference for terminal 7 is terminal 10. The maximum output is rated at 500 mA. All auxiliary devices totaled together must not exceed the Terminal 7 maximum current rating of 500 mA. When the number of keypads or other expansion devices attached exceeds the amount of output current available, attach an external power supply as defined in the 710 Installation Sheet (LT-0310).

Terminal 8 - YEL

Data receive from keypads and zone expanders.

Terminal 9 - GRN

Data transmit to keypads and zone expanders.

Terminal 10 - BLK

Terminal 10 is the ground reference for LCD keypads, zone expanders, and any auxiliary devices being powered by terminals 7 and 11.

Keypad Bus LEDs

The two LEDs located just above terminal 13 indicate keypad transmit data (XMIT) and keypad receive data (RCV). The bottom LED flashes green to indicate data being transmitted from the panel. The top LED flashes yellow to indicate data being received by the panel from keypads, zone expanders, etc.

Programming (PROG) Connection

A locking 4-pin PROG header is provided to connect a keypad when using a DMP Model 330 Programming Cable. This provides a quick and easy connection for programming the panel.

Keypad Addressing

Keypad Bus expansion zones are numbered in groups of four corresponding to the address. For example, address 1 is zones 11-14 and address 5 is zones 51-54.

There are a maximum of 32 zones possible on the Keypad Bus. All keypad zones terminate with a 1k Ohm EOL resistor.

ADDRESS	XT30/XT50 ZONE NUMBER
1	11-14
2	21-24
3	31-34
4	41-44
5	51-54
6	61-64
7	71-74
8	81-84

Overcurrent OVC LED

The Overcurrent LED (OVC) lights Red when the devices connected to the Keypad Bus draw more current than the auxiliary output rating. The OVC LED is located above terminals 9 and 10 as shown in Figure 5. When the OVC LED lights Red, the Keypad bus/auxiliary power (terminal 7) and the PROG header shut down.

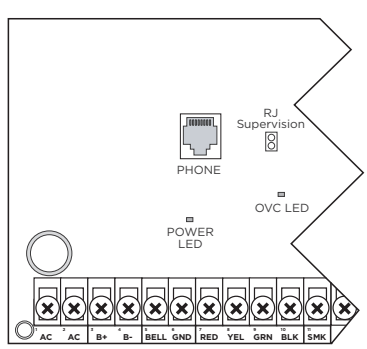

Figure 5: OVC LED Location

Wire Smoke and Glassbreak Detector Output - Terminal 11

Nominal 12 VDC at 100 mA maximum (shared by terminal 25) is supplied at terminal 11 to power 4-wire smoke detectors or other auxiliary powered devices. This output can be turned off by the user for 5 seconds using the Sensor Reset option in the User Menu. Terminal 10 is the ground reference for terminal 11.

Wire Burglary Zones - Terminals 12 - 24

On XT30/XT50 panels, terminals 12 to 24 are the nine burglary zones. For programming purposes, the zone numbers are 1 to 9. The zone configurations on terminals 12 to 24 are described below.

TERMINAL	FUNCTION
12	Zone 1 voltage sensing
13	Ground for zones 1 & 2
14	Zone 2 voltage sensing
15	Zone 3 voltage sensing
16	Ground for zones 3 & 4
17	Zone 4 voltage sensing
18	Zone 5 voltage sensing

TERMINAL	FUNCTION
19	Ground for zones 5 & 6
20	Zone 6 voltage sensing
21	Zone 7 voltage sensing
22	Ground for zones 7, 8, & 9
23	Zone 8 voltage sensing
24	Zone 9 voltage sensing

The voltage sensing terminal measures the voltage across the 1k ohm End-of-Line resistor and the zone's ground terminal. Dry contact sensing devices can be used in series (normally-closed) or in parallel (normally-open) with any of the burglary protection zones.

Operational Parameters

Each burglary protection zone detects three conditions: open, normal, and short.

The parameters for each are listed below:

CONDITION	RESISTANCE ON ZONE	VOLTAGE ON ZONE TERMINAL
Open	over 1300 ohms	over 2.0 VDC
Normal	600 to 1300 ohms	1.2 to 2.0 VDC
Short	under 600 ohms	under 1.2 VDC

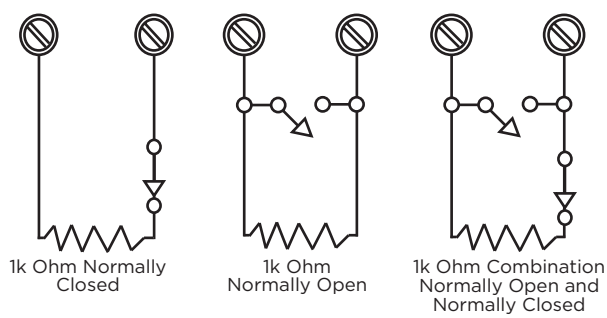

Figure 6: Protection Zone Contact Wiring

Zone Voltages Using 2.2k Ω Resistors

STATE	VOLTAGE
Open	≥ 3 VDC
Normal	2.2 - 2.9 VDC
Short	0 - 2.1 VDC
Applies to zones 1-9 on XT30/XT50 panels with version 193 firmware and higher	

Zone Response Time

A condition must be present on a zone for 500 milliseconds before it is detected by the panel. Ensure detection devices used on the protection zones are rated for use with this delay.

Keyswitch Arming Zone

You can use a momentary keyswitch on a zone programmed as an Arming type for use in arming and disarming the system without a code.

Wire Powered Zone for 2-Wire Smoke Detectors - Terminals 25 and 26

A resettable 2-wire Class B powered zone is provided on terminals 25 (positive) and 26 (negative) of the panel. For programming purposes, the zone number is 10 on the XT30/XT50. The zone uses a Model 309, 3.3k ohm EOL resistor (provided with the panel) and has an operating range of 8.8 to 13.9 VDC.

The compatibility identifier is: B.

Caution: Sensor reset on zone 10 drops power to devices on this zone, causing the panel to sense an open condition on all zone types other than Fire, Fire Verify, and Supervisory. Whenever non-Fire and non-Supervisory zone types are used on zone 10, make the appropriate adjustments to the zone's Armed Action to prevent false alarms from occurring.

MANUFACTURER	MODEL	DETECTOR ID	# OF DETECTORS	ZONE EXPANSION MODULES
DMP/Hochiki	SLR-835B	HD-6	7	715, 715-8, 715-16, 725
Sentrol/ESL	429AT, 521B, 521BXT	S09A	12	715, 715-8, 715-16
System Sensor	2WTA-B, 2WTR-B	A	10	715, 715-8, 715-16

STEP 6: WIRE HARDWARE COMPONENTS

Use this section for reference when using any of these hardware components.

Wire for Annunciator Outputs

The four annunciator outputs can be programmed to indicate the activity of the panel's zones or conditions occurring on the system. Annunciator outputs do not provide a voltage but instead switch-to-ground voltage from another source. The outputs can respond to any of the conditions listed below:

1. Activation by zone condition: Steady, Pulse, Momentary, or Follower
2. Manually from the keypad
3. Communication failure
4. Armed area annunciation
5. Fire Alarm or Fire Trouble
6. Ambush alarm
7. Exit and Entry timers
8. System Ready
9. Late to Close

Harness Wiring

The open collector outputs are accessible by installing the DMP 300 Harness on the 4-pin OUTPUTS header.

The output locations are shown below. For listed applications, devices connected to outputs must be located within the same room as the panel.

OUTPUT	COLOR	WIRE
1	Red	1
2	Yellow	2
3	Green	3
4	Black	4

Model 860 Relay Module

Connect a Model 860 Relay Module to the panel to provide relays for the annunciator outputs that can be used for electrical isolation between the alarm panel and other systems or for switching voltage to control various functions. The module includes one relay and provides three additional sockets for expansion of up to four relays. Power is supplied to the relay coils from the panel keypad bus. The 860 mounts inside the panel enclosure using the 3-hole mounting configuration. Plastic standoffs are provided with the module for ease of installation. A 4-wire harness is also provided that connects the Model 860 to the panel. Relay Contact Rating: 1 Amp at 30 VDC

Connect to Public Telephone Network

Connect the panel to the public telephone network by installing a DMP 356 RJ Cable between the panel's PHONE LINE connector and the RJ31X or RJ38X phone jack.

Caution: To reduce the risk of fire, use only No. 26 AWG or larger telecommunication line cord, such as DMP Model 356 Series Phone Cords.

A two pin RJ SUP header is provided to allow monitoring of the telephone cable connected between the panel and a RJ38X jack (pins 2 and 7 jumpered). Attach a DMP Model 306 Harness between RJ SUP and any available zone. The RJ SUP pins are connected via the telephone cable to the RJ38X jack pins 2 and 7. The RJ38X jack provides a jumper between pins 2 and 7 which completes the circuit. Program the zone as a Supervisory type (SV). When the telephone cable is removed, the keypad displays zone trouble and produces a steady tone.

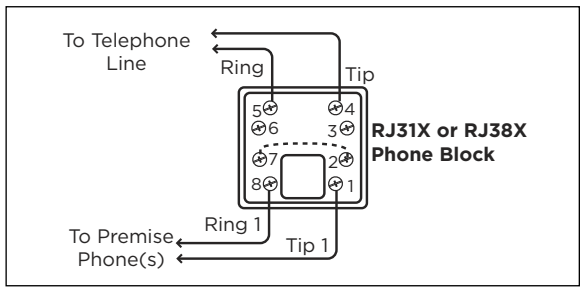

Figure 7: Phone Jack Wiring

FCC Registration

The panel complies with FCC part 68 and is registered with the FCC.

- Registration number: CCKAL00BXT50
- Ringer Equivalence: 0.0B

Notification

Registered terminal equipment must not be repaired by the user. In case of trouble, the device must be immediately unplugged from the telephone jack. The factory warranty provides for repairs. Registered terminal equipment may not be used on party lines or in connection with coin telephones. Notification must be given to the telephone company with the following information:

- The particular line(s) the service is connected to
- The FCC registration number
- The ringer equivalence
- The make, model, and serial number of the device

Connect to Ethernet

The ETHERNET Connector is available on the Network version and connects directly to an Ethernet network using a standard patch cable.

Ethernet LEDs

The two LEDs, located on the left side of the ETHERNET Connector, indicate network operation. The top, Link LED is a steady green light when an ethernet cable is connected. The bottom, Activity LED flashes yellow to indicate messages are being received or transmitted.

Reset the Panel

The RESET header is located just above the terminal strip on the right side of the circuit board and is used to reset the XT30/XT50 microprocessor. To reset the panel when first installing the system, install the reset jumper before applying power to the panel. After connecting the AC and battery, remove the reset jumper.

To reset the panel while the system is operational, for example, prior to reprogramming, install the reset jumper without powering down the system. Remove the reset jumper after one or two seconds.

After resetting the panel, begin programming within 30 minutes. If you wait longer than 30 minutes, reset the panel again.

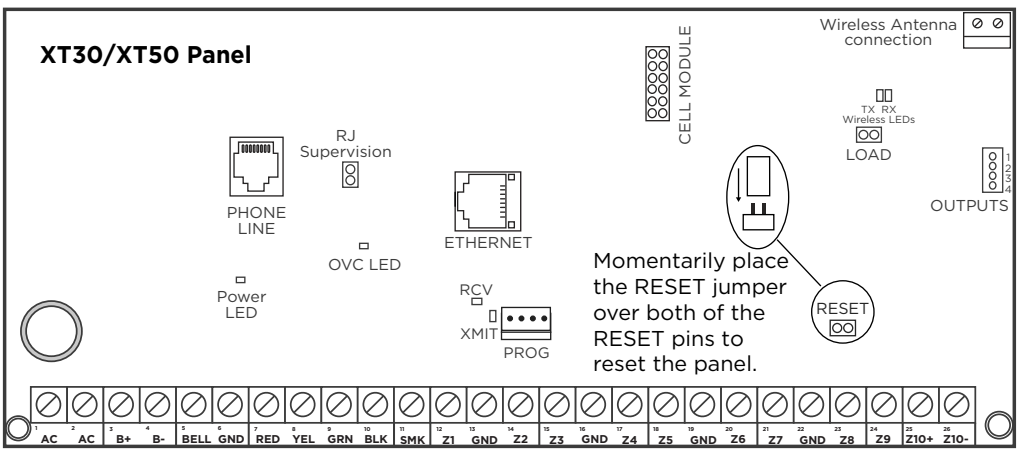

Figure 8: Panel Showing the RESET Header

Update Panel Software on Flash LOAD Jumper

The XT30/XT50 panel software can be updated via the panel's Programming (PROG) header. To update the panel with a new software version, complete the following steps at the protected premise:

Model 399 Cable (Remote Link Only)

1. Place a jumper across the RESET header and then remove the yellow and green wires from keypad bus terminals 8 and 9.
2. Connect a DMP update Cable from the PROG header to the serial port of your PC operating Remote Link and containing the XT RU file. Requires Remote Link 1.43 or higher.
3. Start Remote Link and create or open the XT30/XT50 control panel account that matches the panel to be updated.
4. Set the Connection Information Type to Direct with a baud rate of 38400 and choose the appropriate COM port.
5. Select **Panel** > **Remote Update**, then select the correct RU file for the XT panel model.
6. While placing a short across the LOAD header, remove the jumper from the RESET header. Click **Update** in Remote Link.
7. After the software version is updated, remove the short from the LOAD header. Place the jumper across RESET then remove the 399 cable.
8. Replace the yellow and green wires to terminals 8 and 9.
9. Remove RESET jumper to resume normal panel operation.

Model 401 USB Flash Module

1. Place a jumper across the Reset header.
2. Remove the wires from the keypad bus terminals.
3. Place a jumper from across the Reset header.
4. Place a jumper across the Load header.
5. Connect the USB flash drive with the file (RU) to the Model 401. Connect the assembly to the panel's PROG header. The LED on the Model 401 will flash and display steady green.
6. Remove the jumper across the Reset header.
7. Press and release the button on the Model 401 to initiate the firmware update. The LED on the Model 401 will flash slowly. If the LED displays fast flashes, it means the firmware update was unsuccessful. The update will last up to five minutes. When complete, the LED on the Model 401 will display steady green.
8. Replace the jumper across the Reset header. Remove the USB flash drive and Model 401 assembly.
9. Remove the jumper from the Load header.
10. Remove the jumper from the Reset header
11. Reconnect the keypad bus wires.

Note: In the event the Model 401 USB Flash Module is inadvertently removed from the panel before the updated finishes, repeat steps 1 through 10.

Connect to Cell

The CELL MODULE header is provided to connect a 263 Series Cellular Communicator. The cellular antenna connection protrudes through the top of the enclosure. A brass washer is required if installing a 263LTE Series to an XT50 Series panel.

Note: Do not misalign the cell module 12-pin connector onto cell module header. If needed, the PCB can be removed from the enclosure to allow placement of the cell module.

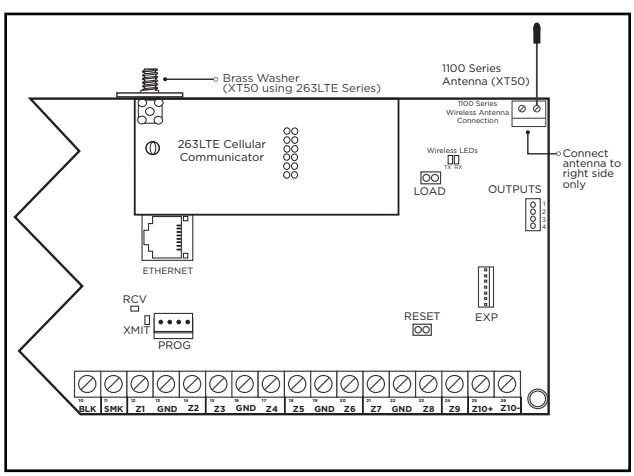

Figure 9: Cellular and 1100 Series Wireless Antenna Connections

Connect to Wi-Fi

The 763 Wi-Fi Module allows you to add Wi-Fi alarm signal communication to XT30/XT50 panels. The 763 connects to the 7-pin EXP header on compatible panels using the included cable and operates at 12 VDC from the panel power supply.

The 763 Wi-Fi Module is compatible with all DMP XT30/XT50 Series control panels with Level L hardware and Version 124 or higher firmware.

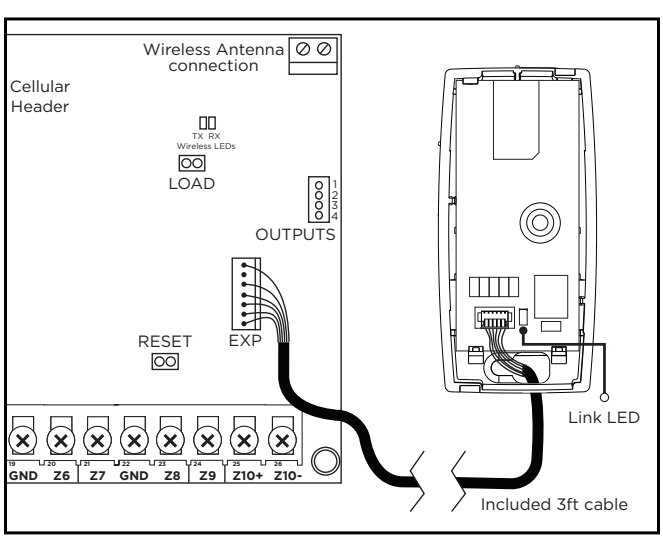

Figure 10: 763 to XT30/XT50 Series

Wire for On-Board 1100 Series Wireless Antenna Connection

Wireless Antenna

The XT50 Wireless Antenna (ANT) terminal block is located at the top right corner of the circuit board. The antenna installs through a small opening in the top of the enclosure and is attached to the panel using the right terminal. The left terminal is not used.

The XT50 built-in wireless operates with DMP 1100 Series transmitters. See *"Accessory Devices"*.

LED Operation

Green (TX): With a wireless house code enabled, the green LED flashes every time the receiver transmits (32 times per second). If a house code is not programmed in the panel, the panel is reset, or the panel is powered off, the green LED will be off. Under normal operation, the green LED flashes constantly with no interruption or change.

Yellow (RX): The yellow LED flashes every time the receiver hears a message from a programmed wireless transmitter. When a message is sent by a transmitter, typically by pressing or releasing the tamper switch, the yellow LED should flash indicating that the receiver received a message from the transmitter. If the LED never flashes, the transmitter is not getting through to the receiver. This could be because of a misprogrammed serial number or the transmitter is too far away. Under normal operation, the yellow LED will flash at every trip of every wireless transmitter and occasionally when the transmitters perform their periodic check-in. It is not unusual for this LED to stay off for many minutes at a time when no transmitters are communicating.

STEP 7: INSTALL WIRELESS KEYPADS

Mount the Keypads

DMP keypads have removable covers that allow the base to be mounted on a wall, desk stand or other flat surface using the screw holes provided on each corner.

Associate Wireless Keypads

Enable Wireless Keypad Association operation on both the keypad and panel. To enable association operation in the XT30/XT50 panel, reset the panel three times allowing the keypad bus transmit light to begin flashing between each reset.

For 60 seconds, the panel listens for wireless keypads that are in RF Survey and have not been programmed or associated into another panel. Wireless keypads are assigned to the first open device position in Device Setup automatically, based upon the order in which they are detected. The keypad logo turns Green to indicate it has been associated with the panel.

Note: A maximum of seven wireless keypads are allowed on each panel.

LCD Wireless Keypad

1. Press and hold the Back Arrow key and **CMD** until SET BRIGHTNESS displays.
2. Enter the code **3577** (INST) at the keypad and press **CMD**.
3. Press **KPD RF** to start the RF survey communication. The keypad displays its wireless serial number and RF SURVEY.

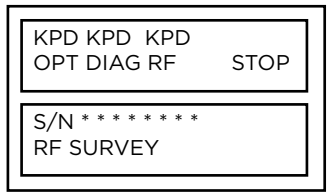

Figure 11: Keypad Screen Installer Options

Wireless Graphics Touchscreen Keypad

1. Access the **Options** menu through the carousel menu.
2. While in the Options display, press the Installer Options icon.
3. Enter the code **3577** (INST) at the keypad and press **CMD**.
4. Press **KPD RF** to start the RF survey communication. The keypad displays its wireless serial number and RF SURVEY.

Power/Armed LED

The keypad Power/Armed LED turns Red, indicating communication has not yet been established with the panel receiver. When successful communication has been established, the Power/Armed LED turns Blue on Graphics keypads or Green on LCD keypads.

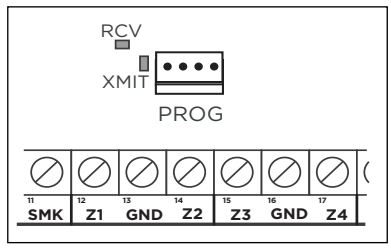

Figure 12: Transmit and Receive LEDs

LISTED COMPLIANCE SPECIFICATIONS

The programming and installation specifications contained in this section must be completed when installing the XT30/XT50 in accordance with any of the ANSI/UL burglary standards. Additional specifications may be required by a particular standard.

Bypass Reports

The bypass reports must be programmed as **YES** for all listed burglary applications.

Current Draw

The total current draw from a combination of auxiliary, smoke, and bell output terminals must not exceed 1.6 Amps.

Battery Standby

Use battery Models 365 (12 VDC 9 Ah) or 366 (12 VDC 18 Ah) with the XT30/XT50 panel when installed in the 340, 341, 349, or 349A enclosures. The Model 364 (12 VDC 1.3 Ah) battery is for use with the XT30/XT50 panel when using the 341 enclosure with the optional 341B Battery Bracket. The Model 364 battery is rated for 4 hours of standby time.

Auxiliary and Bell Current

For listed applications, the maximum auxiliary current is 400 mA, and the maximum bell current is 500 mA.

Cross Zoning

Each zone must have the capability of protecting the common area individually.

App Key

The Remote Option App Key has not been evaluated for use in listed applications.

COMPLIANCE

Household Burglar-Alarm System Units - ANSI/UL 1023

Bell Cutoff

The bell cutoff time cannot be less than four minutes.

Entry Delay

The maximum entry delay used must not be more than 45 seconds.

Exit Delay

The maximum exit delay used must not be more than 60 seconds.

Wireless External Contact

When used, the External Contact of 1101, 1102 or 1106 must be programmed Normally Closed.

Wireless Supervision Time

The Zone Information Supervision Time cannot be set to 0 (zero).

Wireless Audible Annunciation

The Wireless Audible option must be selected as DAY for residential applications.

Panel Location

Mount panel inside protected area.

Test Frequency

The Test Frequency option must be programmed to send a report at least once every 30 days.

Digital Burglar Alarm Communicator System Units - ANSI/UL 1635

Entry Delay

The maximum entry delay used must not be more than 60 seconds.

Exit Delay

The maximum exit delay used must not be more than 60 seconds.

Test Frequency

The Test Frequency option must be programmed to send a report once every 24 hours.

Automatic Bell Test

This option must be programmed as **YES**.

Central Station Burglar Alarm Units - ANSI/UL 1610

Central Station

Commercial Burglary is provided when the Check-in and Fail Time time is set to 3 minutes for Net or Cell communication.

Note: The SecureCom Wireless text plan selected for the panel should match or exceed the programmed Monthly Limit or additional cellular charges may apply.

Digital Dialer Central Station (DACT) service for commercial application can be provided by adding a listed local audible signal appliance and placing the XT30 or XT50 panel into the Model 349A Attack Resistant Enclosure.

Remote Disarm

Remote Disarm must be programmed as **NO**.

Central Station

MESSAGE TO TRANSMIT programming for zones must not be set to LOCAL (L).

Closing Wait

Automatic Bell Test and Opening/Closing must be set to **YES** to enable Closing Wait. Closing Wait provides a delay time before a monitored system arms until the panel receives an acknowledgment of the closing report from the central station receiver.

Household Fire Warning System - ANSI/UL 985 NFPA 72 Specifications

Bell Output Definition

The bell output of the Model XT30/XT50 must be programmed to operate steady on burglary alarms and temporal on fire alarms. See the XT30/XT50 Programming Guide (LT-0981).

Household System

An alarm sounding device must be installed indoors so that it is clearly heard in all sleeping areas.

Household Fire Warning

Recognized limited energy cable must be used for connection of all initiating, indicating, and supplementary devices.

Wireless Supervision Time

The Zone Information Supervision Time must be 3 minutes for fire devices. See the XT30/XT50 Programming Guide.

Wireless Fire Verification

When used, the Model 1161 and 1162 wireless smoke detectors must not be programmed as Fire Verification (FV) zone type. See the XT30/XT50 Programming Guide (LT-0981).

Battery Standby

For UL listed applications, the panel must have 24 Hour battery standby operation. The Model 364 battery should not be used for fire installations.

Alarm Verification

Alarm Verification must only be enabled on smoke detectors that do not employ an integral alarm verification feature.

Model 860

When using the Model 860 Relay Output, a fire and non-fire device must not share a relay.

Test Frequency

The Test Frequency option must be programmed to send a report at least once every 30 days.

Communication Failure

For UL 985 installations, the comm fail output must be configured to annunciate a visual and audible failure of communication.

California State Fire Marshal Specifications

Bell Output Definition

The bell output of the Model XT30/XT50 must be programmed to operate steady on burglary alarms and temporal on fire alarms.

False Alarm Reduction Programmable Options - ANSI/SIA CP-01-2010

Shipping Defaults and Recommended Programming

SIA CP-01 FEATURE DESCRIPTION	DMP PROGRAMMING GUIDE LT-0981 SECTION TITLE	REQUIREMENT	RANGE	SHIPPING DEFAULT	RECOMMENDED PROGRAMMING*
Exit Time	Exit Delay	Required (Programmable)	45 sec. - 250 sec.	60 Seconds	60 Seconds
Progress Annunciation	Prewarn Address	Allowed	Individual keypads may be disabled per zone	All keypads enabled	All keypads enabled
Exit Time Restart	Exit Delay	Required Option	For re-entry during exit time	Enabled	Enabled
Auto Stay Arm on Unvacated Premises	Occupied Premise - See Install Guide	Required Option (except for remote arming)	Occupied Premise NO/YES option	Enabled	Enabled Yes for Residential Applications
Exit Time and Progress Annunciation/Disable - for Remote Arm	Not Available on Remote Arming	Allowed Option	Progress Annunciation Always disabled for Remote Arming	Not Available	Remote Arming not allowed for CP-01 installations.
Entry Delay(s)	Entry Delay	Required (Programmable)	30 sec. – 240 Sec. **	30 Seconds	At least 30 Seconds **
Abort Window – for Non-Fire Zones	Transmit Delay	Required Option	Disable by zone or zone type	Enabled NT DY EX Zone	Enabled
Abort Window Time – for Non-Fire Zones	Transmit Delay	Required (Programmable)	20 sec., 30 sec., or 40 sec. **	30 Seconds	At least 20 Seconds **
Abort Annunciation	Transmit Delay	Required Option	Annunciate that no alarm was transmitted	Yes	Yes
Cancel Annunciation	Always Enabled - Not Programmable	Required Option	Annunciate that a Cancel was transmitted (S49)	Always Enabled	Yes
Cross Zoning	Cross Zone	Required Option	Yes/No Zone Programming	No	Enabled using two or more programmed zones
Programmable Cross Zoning Time	Cross Zone Time	Allowed	4 sec. - 250 sec.	0 Seconds	Per walk path in protected premises
Swinger Shutdown	Not Available — Always On	Required	1-6 trips	2 trips	2 trips
Swinger Shutdown Disable	Swinger Bypass	Allowed	For non-police response zones	Yes	Enabled (all zones)
Fire Alarm Verification	Zone Type	Required Option	FV Type Zone	No	Yes as required (unless sensors can self verify)
Call Waiting Cancel	First Telephone Number	Required Option	Include *70P in Telephone Number	Disabled	Enabled if user has call waiting
System Test	Walk Test	Allowed	Test all protection devices	N/A	N/A
Communications	Walk Test	Not Allowed	N/A	N/A	N/A

* Programming at installation may be subordinate to other listed requirements for the intended application.
** For listed Installations, combined Entry Delay and Transmit Delay should not exceed 1 minute.

Call Waiting

The Call Waiting default setting is disabled. To cancel the Call Waiting feature, program * (star) 7 0 P (pause), the standard telephone code prefix that cancels call waiting, into the telephone number string.

Cancel Call Waiting for telephone lines that have Call Waiting operational on the telephone line. See the XT30/XT50 Programming Guide.

Caution: A call waiting cancel programmed on a non-call waiting telephone line, would prevent communication to the central station.

Entry Delay

Only use Entry Delay 1. Do not use Entry Delay 2. See the XT30/XT50 Programming Guide (LT-0981).

Local Bell

All non-fire zones such as Night, Day, Exit, Aux1 and Aux 2 must be programmed for local bell enabled with a bell cutoff time set to a minimum of 6 minutes to provide a cancel window of 5 minutes or greater. This does not apply to manually operated zone types such as Panic and Emergency.

Minimum Installation Requirements

SIA CP-01-2010 minimum system installation requirements include an XT30 or XT50, a local Bell, and off premise DACT communication to an SCS-1R receiver plus one of the following compatible keypads.

- 7060, 7063, 7070, 7073, 7160, 7163, 7170, or 7173 Thinline™ Keypads
- 7060A, 7063A, 7070A, or 7073A Aqualite™ Keypads
- 7360 or 7363 Thinline™ Icon Keypads
- 7872 or 7873 Graphic Touchscreen Keypads

TROUBLESHOOTING

Troubleshooting Section

This section provides troubleshooting information for use when installing or servicing an XT30/XT50 system.

PROBLEM	POSSIBLE CAUSE	POSSIBLE SOLUTIONS
Keypad displays “SYSTEM TROUBLE”	RESET Jumper is installed.	Remove the RESET reset jumper.
	Open or short on the green data wire to the keypad.	Check for broken or shorted wires between the panel and the keypad.
	Bad keypad or zone expander is affecting the Green data wire.	Replace keypad or zone expander.
Keypad keyboard is not functional. When a key is pressed, only a short beep is emitted.	Open or short on the yellow data wire to the keypad.	Check for broken or shorted wires between the panel and the keypad.
	Bad keypad or zone expander. is affecting the Yellow data wire.	Replace keypad or zone expander.
Keypad XMIT Green LED is off	Panel is reset.	Remove RESET jumper.
	Flash Load enabled.	Remove LOAD jumper and reset panel.
Keypad RCV Yellow LED is off	Keypad/expanders are not connected to panel.	Connect keypad/expanders.
	Keypad/expanders are greater than eight.	Check keypad/expanders address.
Keypad beeps when keys are pressed, but will not allow the user to arm or disarm, or enter the User Menu.	Two or more keypads are assigned to the same address.	Set each keypad on the system to a unique address.
Power LED is off.	AC/Battery is not connected.	Connect AC power and/or battery.
Overcurrent OVC LED turns Red	Too many devices attached to auxiliary.	Maximum current draw is 500 mA.
Wireless Green TX LED is off.	Wireless House Code is not programmed.	Program House Code in System Options.
Wireless Yellow RX LED never flashes.	Transmitters are not getting through to receiver.	Check transmitter serial numbers.
		Move transmitter closer.
		If XT30, replace 1100 series receiver.
Wireless Green TX and Yellow RX LEDs are both on steady	Panel is reset.	Remove RESET jumper.
	Flash Load enabled	Remove LOAD jumper and reset panel.
Keypad operates intermittently, keystrokes may be missed, or display does not update consistently.	Wire length may exceed maximum, resulting in poor data performance.	Wire length can be reduced or a heavier gauge used.
		A power supply can be added near the keypad. See LT-2031, LX-Bus/Keypad Bus Wiring Application Note for more information.

Common LCD Keypad Displays

Listed below are several keypad messages you may see on the display. Follow the instructions in the "Possible Solutions" column to correct the problem.

MESSAGE	MEANING	POSSIBLE SOLUTIONS
INVALID CODE	The user code entered is not recognized by the system.	Check the user code and try again.
CLOSING TIME	The system was not armed at its scheduled closing time.	Users still on the premise should arm the system or extend the schedule to a later time.
AC TROUBLE	The system AC is low or missing.	Check that the AC connections are good from the transformer.
BATTERY TROUBLE	The System battery is either low or missing.	Check to see that battery and connections are good.
SYSTEM BUSY	The system is performing another task with a higher priority or is being Remote Programmed.	Wait a few moments for the system to complete the task. Make sure the RESET jumper is not on the panel. If the message displays for several minutes, the keypad is not receiving polling from the panel.
TRANSMIT FAIL	The panel has attempted to communicate with the central station multiple times and has not succeeded.	Verify your communication type, account number, and phone number. Make sure the telephone line is connected and working properly.

WIRING DIAGRAMS

Multiple Indicating Circuit Modules Installation

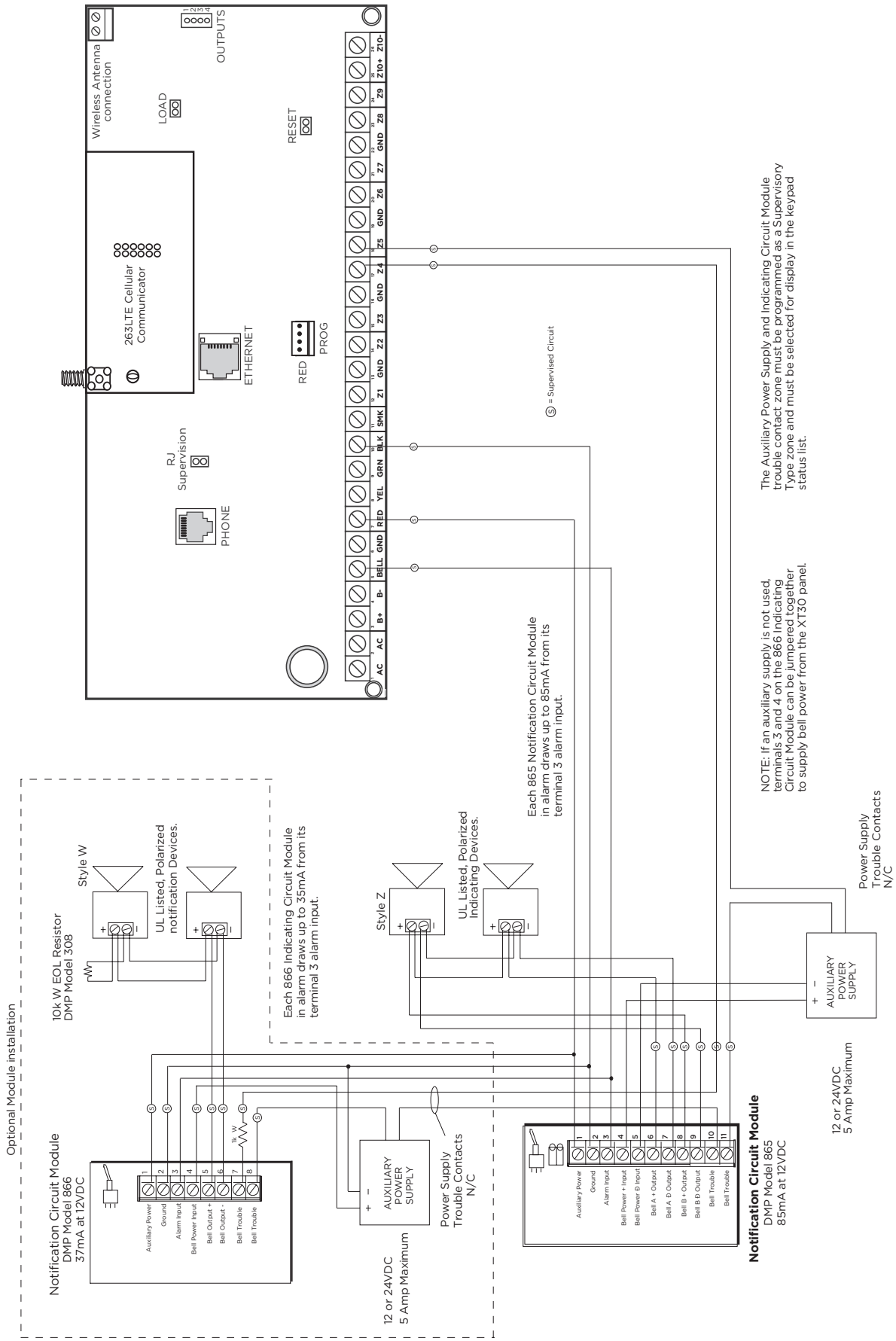

System Sensor 2-Wire Smoke Detectors

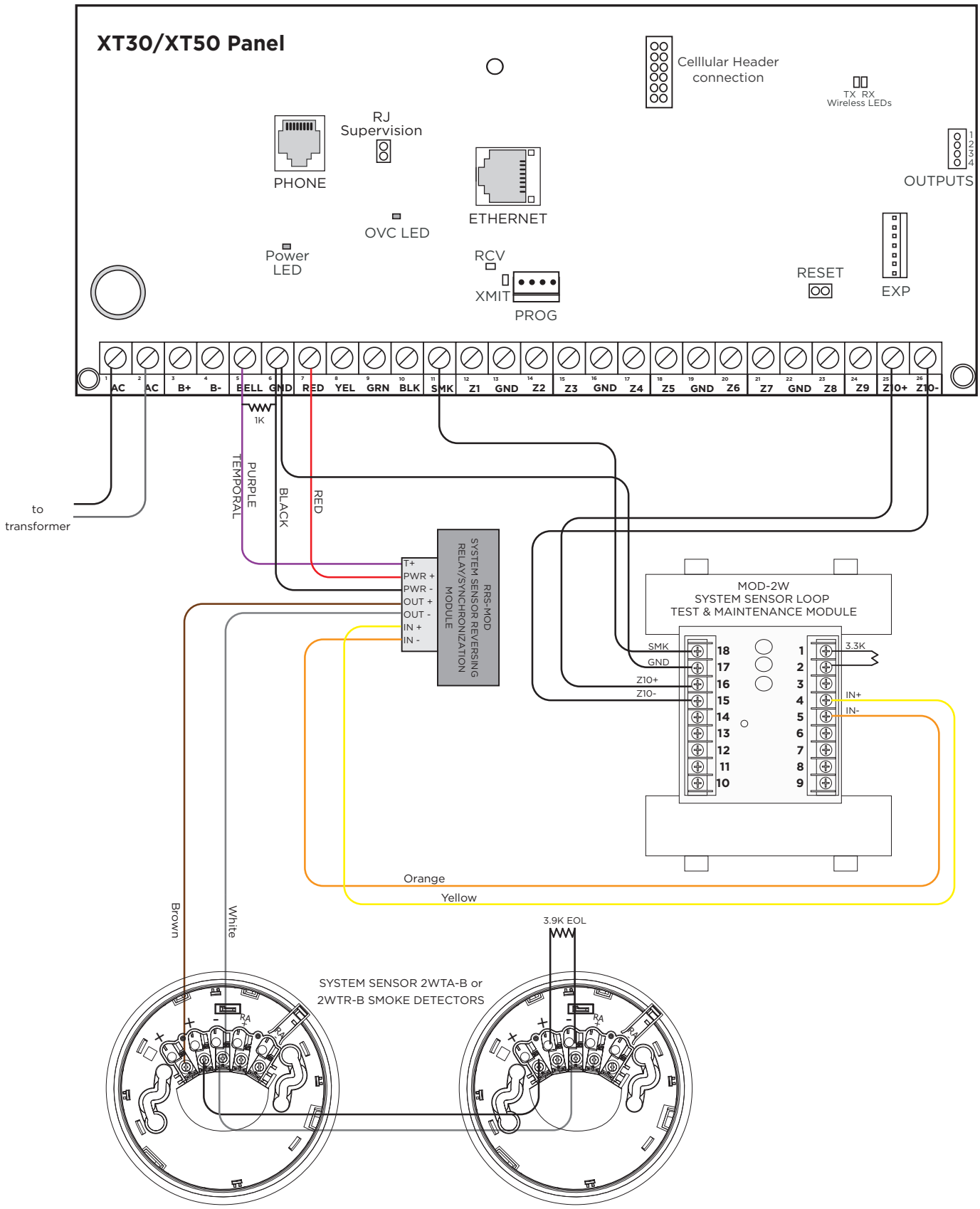

SPECIFICATIONS

Power Supply

Transformer Input	Plug-in — 16.5 VAC 40 VA, Model 321
Standby Battery	12 VDC, 1.0 Amps Max. charging current Models 364, 365, 366, 368, or 369 Replace every 3 to 5 years
Auxiliary Output	12 VDC at 500 mA 12 VDC at 325 mA when used with two Model 364 batteries in the Model 341 Enclosure
Bell Output	12 VDC at 1.5 Amps
Smoke Detector Output	12 VDC at 100 mA

All circuits inherent power limited.

Note: Please see the *"Listed Compliance Specifications"* section for certificated application requirements.

Enclosure

The XT30/XT50 panel ships standard in a 340 enclosure with EOL resistors, battery leads, user's guide, and programming sheet.

MODEL	SIZE	COLOR	CONSTRUCTION (COLD ROLLED STEEL)
340	12.5 W x 9.5 H x 2.75 D in 31.8 W x 24.1 H x 7.0 D cm	Gray (G)	20-Gauge
349	12.5 W x 11.5 H x 3.5 D in 31.8 W x 29.2 H x 8.9 D cm	Gray (G)	20-Gauge
349A	13.3 W x 11.6 H x 3.6 D in 33.7 W x 29.6 H x 9.1 D cm	Gray (G)	18-Gauge with 16-Gauge door
341	13.0 W x 6.6 H x 3.5 D in 33.0 W x 16.6 H x 8.9 D cm	Gray (G)	20-Gauge

Communication

- Built-in SDLC Digital Dialer communication to DMP Model SCS-1R Receivers
- Built-in network communication to DMP Model SCS-1R or SCS-VR Receivers
- Modular cellular communication to DMP Model SCS-1R or SCS-VR Receivers
- Modular Wi-Fi network alarm signal communication to DMP Model SCS-1R or SCS-VR Central Station Receivers.
- Built-in CID (Contact ID) dialer communication to DMP Model SCS-1R Receivers

Keypads/Expansion

- Connect up to eight supervised alphanumeric keypads per panel, seven of which can be wireless keypads.
- Connect additional unsupervised keypads: 5-Inch Touchscreen, Thinline™, Aqualite™, and Icon keypads
- In addition, the following zone expanders can be added:
  - One, four, eight and 16-zone expansion modules
  - Single-zone PIR and glassbreak detectors

Panel Zones

- Nine 1k or 2.2K ohm EOL burglary zones: zones 1 to 9
- One 3.3k ohm EOL Class B powered fire zone with reset capability: zone 10

Number of Zones

- Onboard zones 1-10
- Eight keypad bus addresses with zones 11-14, 21-24, 31-34, 41-44, 51-54, 61-64, 71-74, and 81-84.
- Zone numbers 31 to 34 and 41 to 44 can support 1100 Series Key Fobs or DMP wireless output modules
- XT50 has 16 additional onboard wireless zones numbered 80, 85-99

Outputs

- The XT30/XT50 panels provide four open collector outputs rated for 50 mA each. A Model 300 Output Harness is required. The open collector outputs provide the ground connection for a positive voltage source.

CERTIFICATIONS

- California State Fire Marshal (CSFM)
- FCC Part 15 Registration ID CCKPC0096
- FCC Part 68 Registration ID CCKAL00BXT50

ETL Listed

ANSI/SIA CP-01	False Alarm Reduction
ANSI/UL 1023	Household Burglar
ANSI/UL 985	Household Fire Warning
ANSI/UL 1610	Central Station Burgla
ANSI/UL 1635	Digital Burglar

FCC Information

This equipment has been tested and found to comply with the limits for a Class B digital device, pursuant to part 15 of the FCC Rules. These limits are designed to provide reasonable protection against harmful interference in a residential installation. This equipment generates, uses and can radiate radio frequency energy and, if not installed and used in accordance with the instructions, may cause harmful interference to radio communications. However, there is no guarantee that interference will not occur in a particular installation. If this equipment does cause harmful interference to radio or television reception, which can be determined by turning the equipment off and on, the user is encouraged to try to correct the interference by one or more of the following measures:

- Reorient or relocate the receiving antenna.
- Increase the separation between the equipment and receiver.
- Connect the equipment into an outlet on a circuit different from that to which the receiver is connected.
- Consult the dealer or an experienced radio/TV technician for help.

Changes or modifications not expressly approved by the party responsible for compliance could void the user's authority to operate the equipment.

This device has been designed to operate with the 1100 Series antenna listed in the Accessory Devices section, and having a maximum gain of 1.8 dB. Antennas not included in this list or having a gain greater than 1.8 dB are strictly prohibited for use with this device. The required antenna impedance is 50 ohms.

If necessary, the installer should consult the dealer or an experienced radio/television technician for additional suggestions. The installer may find the following booklet, prepared by the Federal Communications Commission, helpful: "How to identify and Resolve Radio-TV Interference Problems."

This booklet is available from the U.S. Government Printing Office, Washington D.C. 20402 Stock No. 004-000-00345-4.

This device complies with part 15 of the FCC Rules. Operation is subject to the following two conditions: (1) This device may not cause harmful interference, and (2) this device must accept any interference received, including interference that may cause undesired operation.

Industry Canada Information

This device complies with Industry Canada Licence-exempt RSS standard(s). Operation is subject to the following two conditions: (1) this device may not cause interference, and (2) this device must accept any interference, including interference that may cause undesired operation of the device.

Le présent appareil est conforme aux CNR d'Industrie Canada applicables aux appareils radio exempts de licence. L'exploitation est autorisée aux deux conditions suivantes : (1) l'appareil ne doit pas produire de brouillage, et (2) l'utilisateur de l'appareil doit accepter tout brouillage radioélectrique subi, même si le brouillage est susceptible d'en compromettre le fonctionnement.

Designed, engineered, and manufactured in Springfield, MO using U.S. and global components.

LT-0980 1.15 25122

© 2026

INTRUSION • FIRE • ACCESS • NETWORKS

2500 North Partnership Boulevard
Springfield, Missouri 65803-8877

800.641.4282 | DMP.com